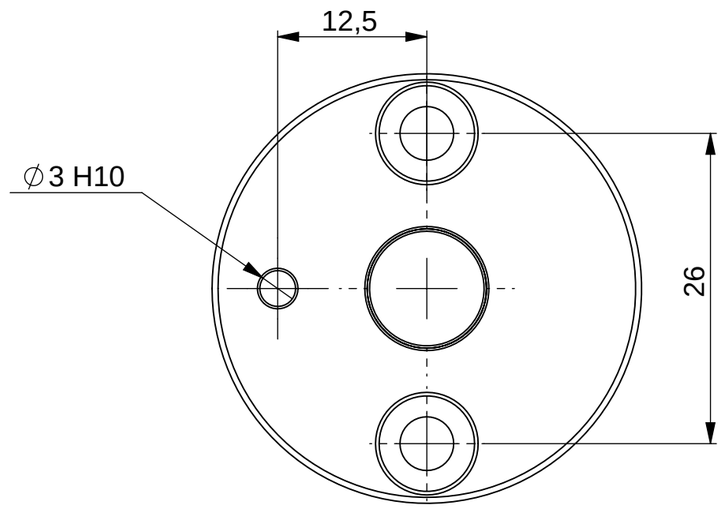

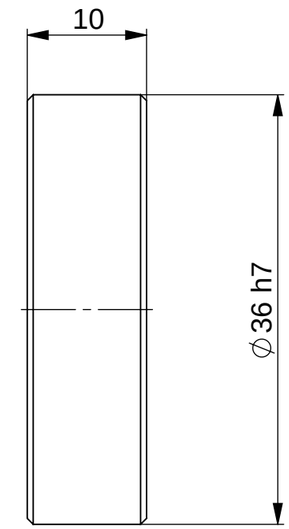

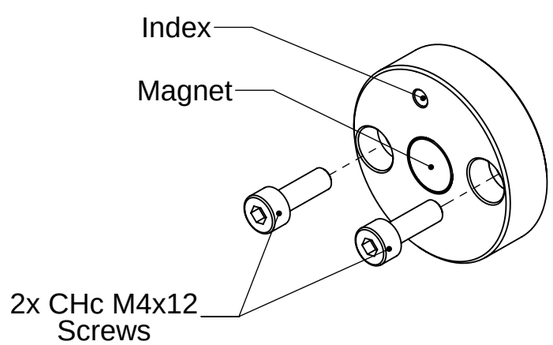

UNCONTROLLED COPY

FIRST ISSUE DATE : 26/10/2018
DRAWN : RHM
APPROVED : JHH
DATE : 26/10/2018

SENSATA TECHNOLOGIES PROPRIETARY AND CONFIDENTIAL. NEITHER THIS PRINT NOR THE INFORMATION CONTAINED HEREON IS TO BE USED AGAINST THE INTERESTS OF SENSATA TECHNOLOGIES OR AGAINST THE INTERESTS OF ANY OF ITS AFFILIATED COMPANIES OR WHOLLY OWNED SUBSIDIARIES.

BEI SENSORS SAS
Espace Europ®en de lõEntreprise
9, rue de Copenhague
BP 70044 - F 67013 STRASBOURG Cedex
Tel : +33 (0)3 88 20 81 40

ECN :
DATE :

UNLESS OTHERWISE SPECIFIED DIMENSIONS ARE IN MILLIMETERS [INCHES] AND ARE INTENDED AS NOMINAL. SEE PRODUCT SPECIFICATION FOR MORE DETAILS.

TITLE: M9105/F26

Housing material : Aluminum
Flange material : -
Shaft material : -

DO NOT SCALE DRAWING

EUROPEAN SYSTEM

SIZE	DWG NO.	REV.
A3	M093	A

SCALE	SOLIDWORKS	SHEET
2/1		1 OF 1

DEVICE:

PROJECT: