ZONE	REV.	REVISION DESCRIPTION	ECO NO.	DATE
				1/12/18

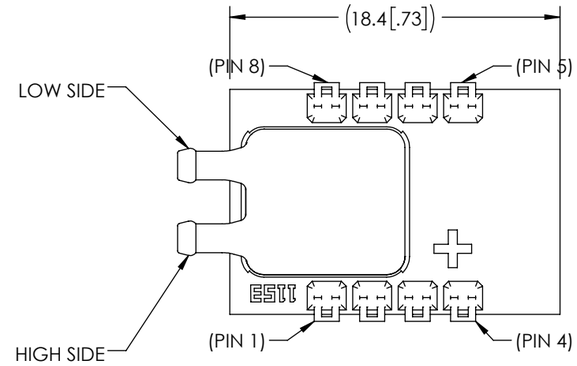

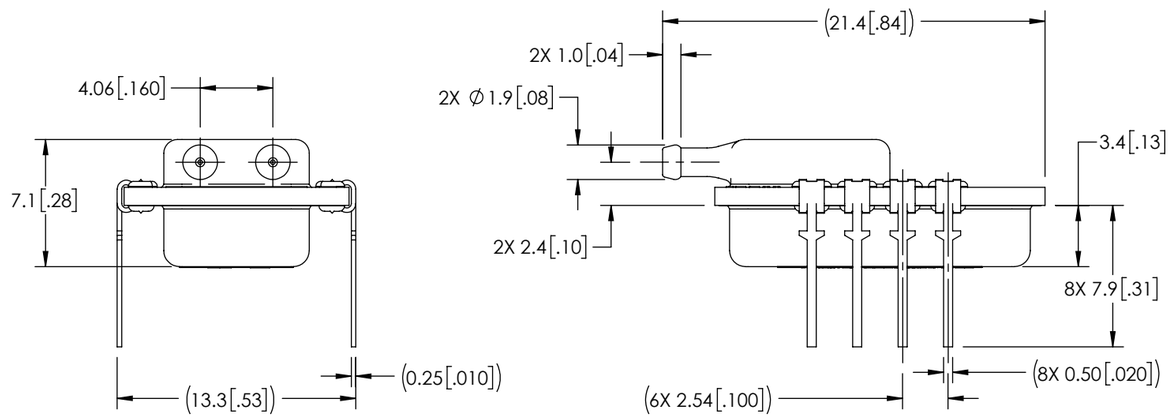

P1J-2-AX16PA SHOWN

PART NUMBER DESIGNATION:

P1J-2-A X 16 P A

PRESSURE RANGE
- 0-2" H2O..... 2
- ±2" H2O..... 2B
- 0-5" H2O..... 5
- ±5" H2O..... 5B
- 0-10" H2O..... 10
- ±10" H2O..... 10B
- 0-5 mbar..... 5MB
- ±5 mbar..... 5MBB
- ±6 mbar..... 6MBB
- 0-12.5 mbar..... 12.5MB
- ±12.5 mbar... 12.5MBB
- 0-25 mbar..... 25MB
- ±25 mbar..... 25MBB

OUTPUT TYPE
- SPI..... 8
- I^2C, 28 hex..... A
- I^2C, 38 hex..... B
- I^2C, 48 hex..... C
- I^2C, 58 hex..... D
- I^2C, 68 hex..... E
- I^2C, 78 hex..... F

SEAL MATERIAL (EXTERNAL)
- A..... NONE

BUILT-IN ELECTRICAL CONNECTOR
- P..... TERMINAL PIN

PRESSURE PORT
- 16..... BARB OR TUBE FITTING

SEAL MATERIAL (INTERNAL)
- X..... NONE

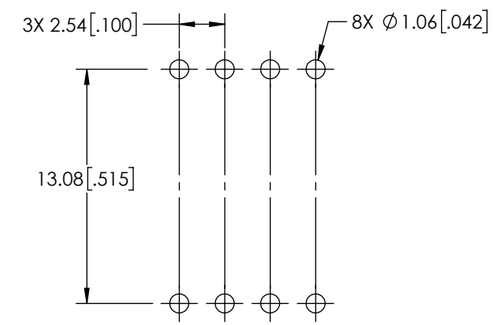

RECOMMENDED PCB LAYOUT

DATE CODE EXAMPLE: C 1 0 1 5
- C MARCH
- 10 10th DAY OF THE MONTH
- 15 CURRENT YEAR

PROPOSED SPECIFICATIONS & CONFIGURATIONS FOR PROTOTYPE ONLY -SUBJECT TO CHANGE-

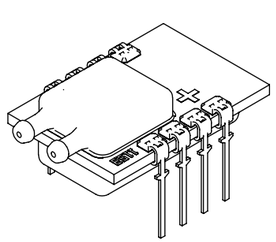

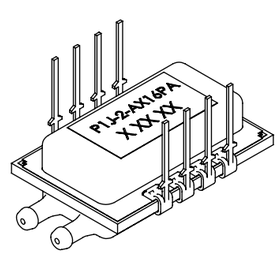

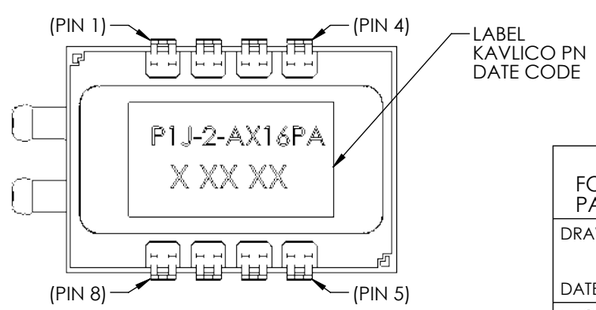

FOR REFERENCE ONLY, CHECK LATEST REVISION BEFORE USE.
PARTS MADE TO THIS PRINT MUST CONFORM TO E9898 REV. E.

DRAWN
DATE
ENGINEER
DATE
APPROVED
DATE
APPROVED
DATE

SENSATA TECHNOLOGIES PROPRIETARY AND CONFIDENTIAL. NEITHER THIS PRINT NOR THE INFORMATION CONTAINED HEREON IS TO BE USED AGAINST THE INTERESTS OF SENSATA TECHNOLOGIES OR AGAINST THE INTERESTS OF ANY OF ITS AFFILIATED COMPANIES OR WHOLLY OWNED SUBSIDIARIES.

INTERPRET DIMENSIONING AND TOLERANCING PER ASME Y14.5-2009. UNLESS OTHERWISE SPECIFIED DIMENSIONS ARE IN INCHES.

TOLERANCES

	DECIMALS	ANGLES
X.X	±0.25 [.XXX ± .010]	1/2° MAX ±
X.XX	±0.8 [.XX ± .03]	
X.XXX	±0.25 [.XXX ± .010]	

DO NOT SCALE DRAWING

THIRD ANGLE PROJECTION

Sensata Technologies
529 PLEASANT STREET
P.O. BOX 2964
ATTLEBORO, MA 02703

TITLE

PRESSURE TRANSDUCER

SIZE	DWG NO.	REV.
B	P1J-DWG	

SCALE 3:1 | SOLIDWORKS | SHEET 1 OF 1