ZONE	REV.	REVISION DESCRIPTION	ECN NO.	DATE
	G			

WINDING CONSTANTS *	UNITS	TOL	SYMBOL	WDG A
DC RESISTANCE	OHMS	±12.5%	R	11.0
VOLTAGE @ F_P	VOLTS	NOMINAL	V_P	25.1
CURRENT @ F_P	AMPERES	NOMINAL	I_P	2.28
FORCE SENSITIVITY	oz/AMP	±10%	K_F	21.1
	N/AMP	±10%		5.87
BACK EMF CONSTANT	V/FT/SEC	±10%	K_B	1.79
	V/M/SEC	±10%		5.87
INDUCTANCE ****	MILLI-HENRY	±15%	L	3.05

ACTUATOR PARAMETERS *	UNITS	SYMBOL	VALUE
PEAK FORCE **	oz	F_P	48
	N		13.3
CONTINUOUS STALL FORCE ***		F_{CS}	17.8
	N		4.95
ACTUATOR CONSTANT	oz/ $\sqrt{WATT}$	K_A	6.36
	N/ $\sqrt{WATT}$		1.77
ELECTRICAL TIME CONSTANT	MICRO-SEC	τ_E	277
MECHANICAL TIME CONSTANT	MILLI-SEC	τ_M	4.43
POWER I^2R @ F_P	WATTS	P_P	57.2
STROKE	± INCHES		0.180
	± MM		4.57
CLEARANCE ON EACH SIDE OF COIL	IN		0.015
	MM		0.38
THERMAL RESISTANCE OF COIL	°C/WATT	Θ_{TH}	11.3
MAX. ALLOWABLE COIL TEMP.	°C	TEMP	155
WEIGHT OF COIL ASSEMBLY	oz	WT_C	0.49
	g		13.89
WEIGHT OF FIELD ASSEMBLY	oz	WT_F	2.0
	g		56.7

* 25°C AMBIENT TEMPERATURE
** 10 SECONDS AT 25°C AMBIENT & 155°C COIL TEMP
*** 25°C AMBIENT & 155°C WINDING TEMPERATURE
**** MEASURED AT 1000 Hz

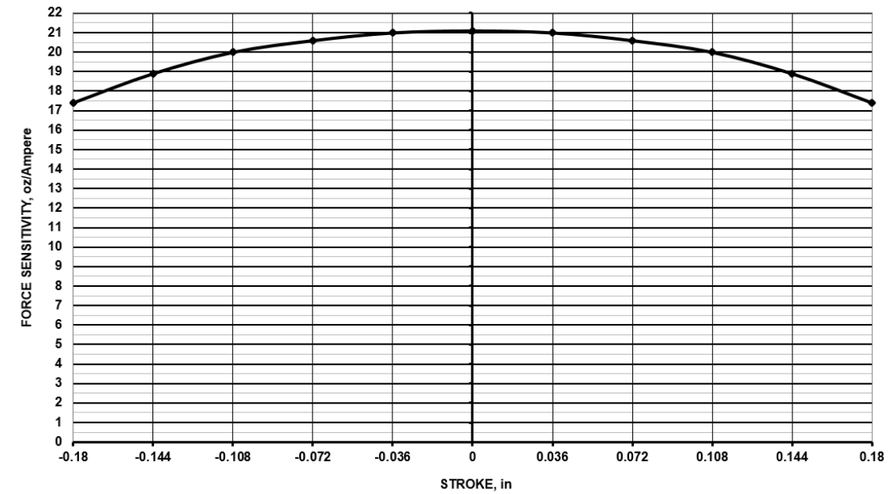

2.
FORCE VECTOR
- ← → +

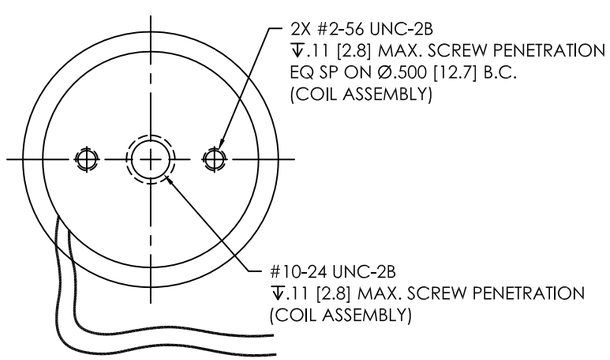

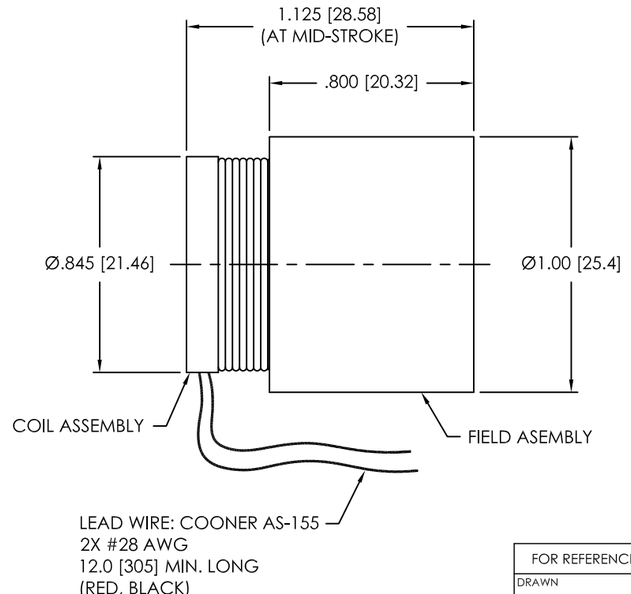

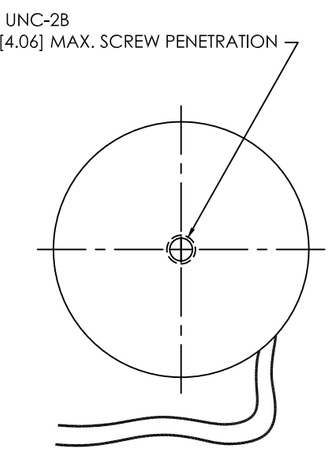

NOTES: UNLESS OTHERWISE SPECIFIED

1. INCH DRAWING, DIMENSIONS IN BRACKETS [ ] ARE IN MILLIMETERS AND ARE FOR REFERENCE ONLY.

2. A POSITIVE (+) VOLTAGE APPLIED TO THE RED LEAD WILL PRODUCE A FORCE ON THE COIL ASSEMBLY IN THE POSITVE (+) DIRECTION.

AUTOCAD

FOR REFERENCE ONLY, CHECK LATEST REVISION BEFORE USE.

DRAWN
DATE
ENGINEER
DATE
APPROVED
DATE
APPROVED
DATE

SENSATA TECHNOLOGIES PROPRIETARY AND CONFIDENTIAL. NEITHER THIS PRINT NOR THE INFORMATION CONTAINED HEREON IS TO BE USED AGAINST THE INTERESTS OF SENSATA TECHNOLOGIES OR AGAINST THE INTERESTS OF ANY OF ITS AFFILIATED COMPANIES OR WHOLLY OWNED SUBSIDIARIES.

INTERPRET DIMENSIONING AND TOLERANCING PER ASME Y14.5-2009. UNLESS OTHERWISE SPECIFIED DIMENSIONS ARE IN INCHES.

TOLERANCES

DECIMALS	ANGLES
X.X ± 0.03	X.X° ± 0°30'
X.XX ± 0.01	
X.XXX ± 0.005	

DO NOT SCALE DRAWING

THIRD ANGLE PROJECTION

RoHS

Sensata Technologies
529 PLEASANT STREET
P.O. BOX 2964
ATTLEBORO, MA 02703

TITLE
LINEAR ACTUATOR

SIZE	DWG NO.	REV.
C	LA10-12-027A	G

SCALE: NONE | SHEET: 1 OF 1