REV	DCN NO.	DESCRIPTION	DRN	APP'D	DATE
A	020403	SPECIFY FORCE VECTOR	MJL	M.G.	5/6/02

WINDING CONSTANTS	UNITS	TOL	SYM	WDG A
DC RESISTANCE	OHMS	±12.5%	R	7.2
VOLTAGE @ FORCE 8.0 OZ	VOLTS	NOMINAL	Vc	18.6
CURRENT @ FORCE 8.0 OZ	AMPERES	NOMINAL	Ic	2.58
FORCE SENSITIVITY	OZ/AMP	±10%	Kf	3.1
BACK EMF CONSTANT	VOLTS/FT/SEC	±10%	Kb	.263
INDUCTANCE	MILLI-HENRY	±30%	L	1230

LINEAR ACTUATOR PARAMETERS	UNITS	SYM	VALUE
PEAK FORCE *	OZ	Fp	8.0
CONTINUOUS STALL FORCE **	OZ	Fcs	2.26
ACTUATOR CONSTANT	$OZ/\sqrt{WATT}$	Ka	1.16
ELECTRICAL TIME CONSTANT	MICRO-SEC	Te	171
MECHANICAL TIME CONSTANT	MILLI-SEC	Tm	63.1
POWER I^2R @ FORCE 8.0 OZ	WATTS	P	48
STROKE	± IN		1.5
CLEARANCE ON EACH SIDE OF COIL	IN		.025
THERMAL RESISTANCE OF COIL	°C/WATT	Θth	22.6
MAX ALLOWABLE TEMP OF COIL	°C	TEMP	155
WEIGHT OF COIL ASSEMBLY	OZ	WTc	.23
TOTAL WEIGHT	OZ	WTt	10.04

* 10 SEC @ 25°C AMBIENT, 155°C WINDING TEMP
** 25°C AMBIENT, 155°C WINDING TEMP

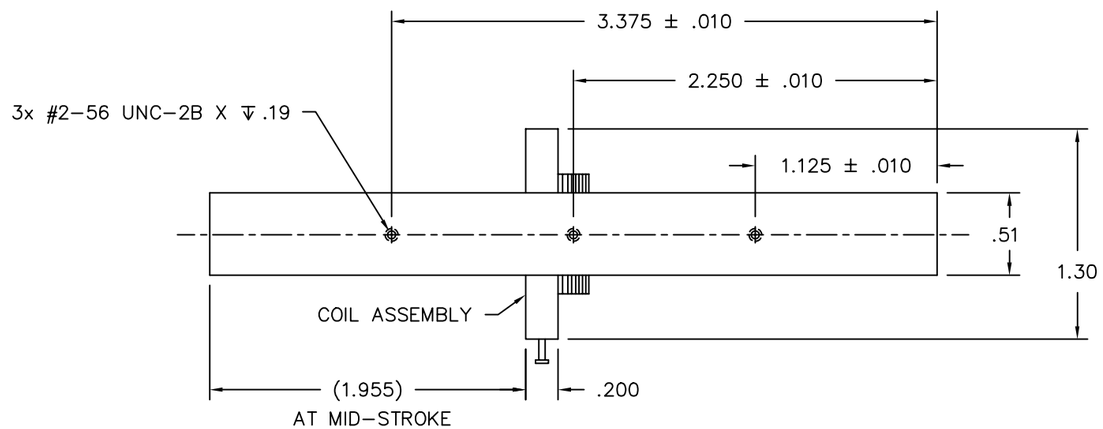

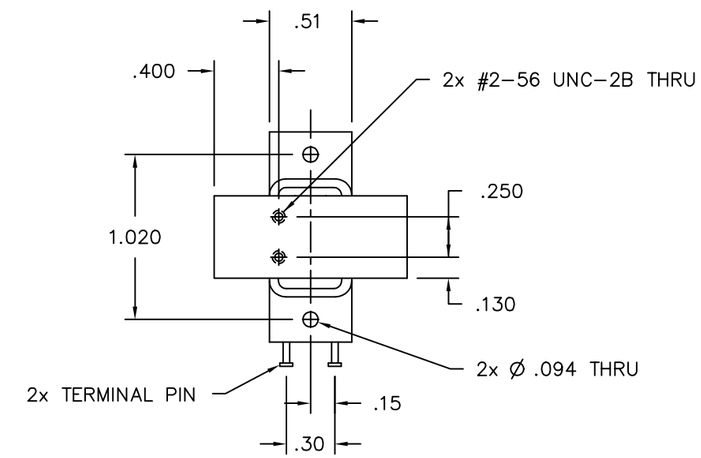

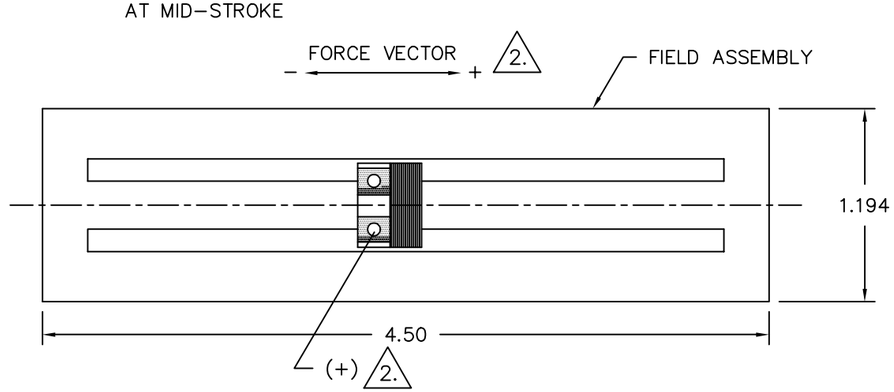

2. A POSITIVE (+) VOLTAGE APPLIED TO INDICATED TERMINAL PIN WILL PRODUCE A FORCE ON THE COIL ASSEMBLY IN THE POSITVE (+) DIRECTION.

1. INTERPRET DIMENSIONS & TOLERANCES PER ANSI Y14.5M-1982.

NOTES: UNLESS OTHERWISE SPECIFIED

DO NOT SCALE DRAWING
UNLESS OTHERWISE SPECIFIED:
DIMENSIONS ARE IN INCHES
TOLERANCES ARE
ANGULAR = ± 30' .X = ± .03
.XX = ± .01 .XXX = ± .005

SIZE	FSCM NO.	BEI KIMCO MAGNETICS DIVISION SAN MARCOS, CA 92069	
B	55789		
TITLE: LINEAR ACTUATOR		DWG NO: LA12-50-001A	
		DRN: McGHEE	2/3/94
SCALE: 1/1	SHT 1 OF 1	APP'D: A. MORCOS	2/3/94